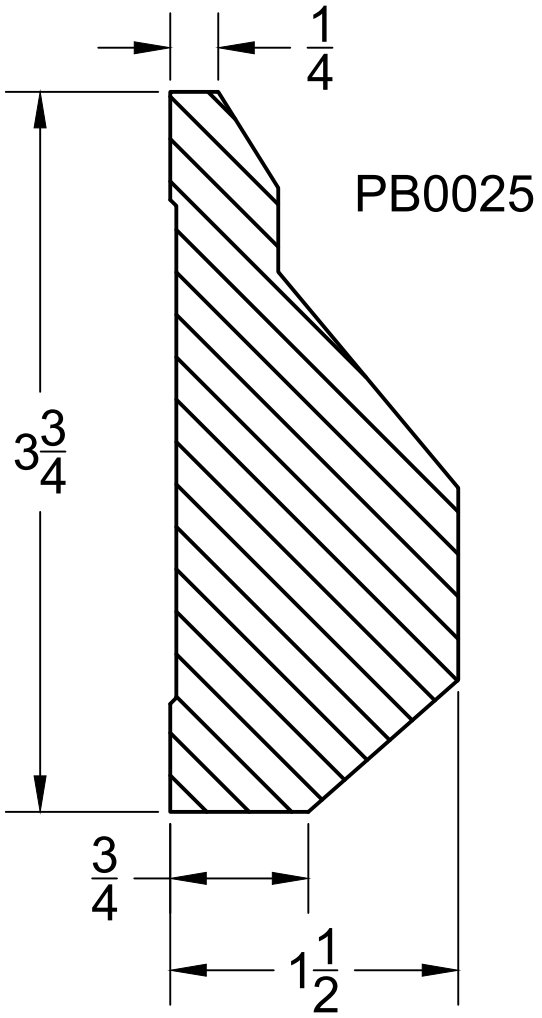
1/4
PB0025
3 3/4
3/4
1 1/2