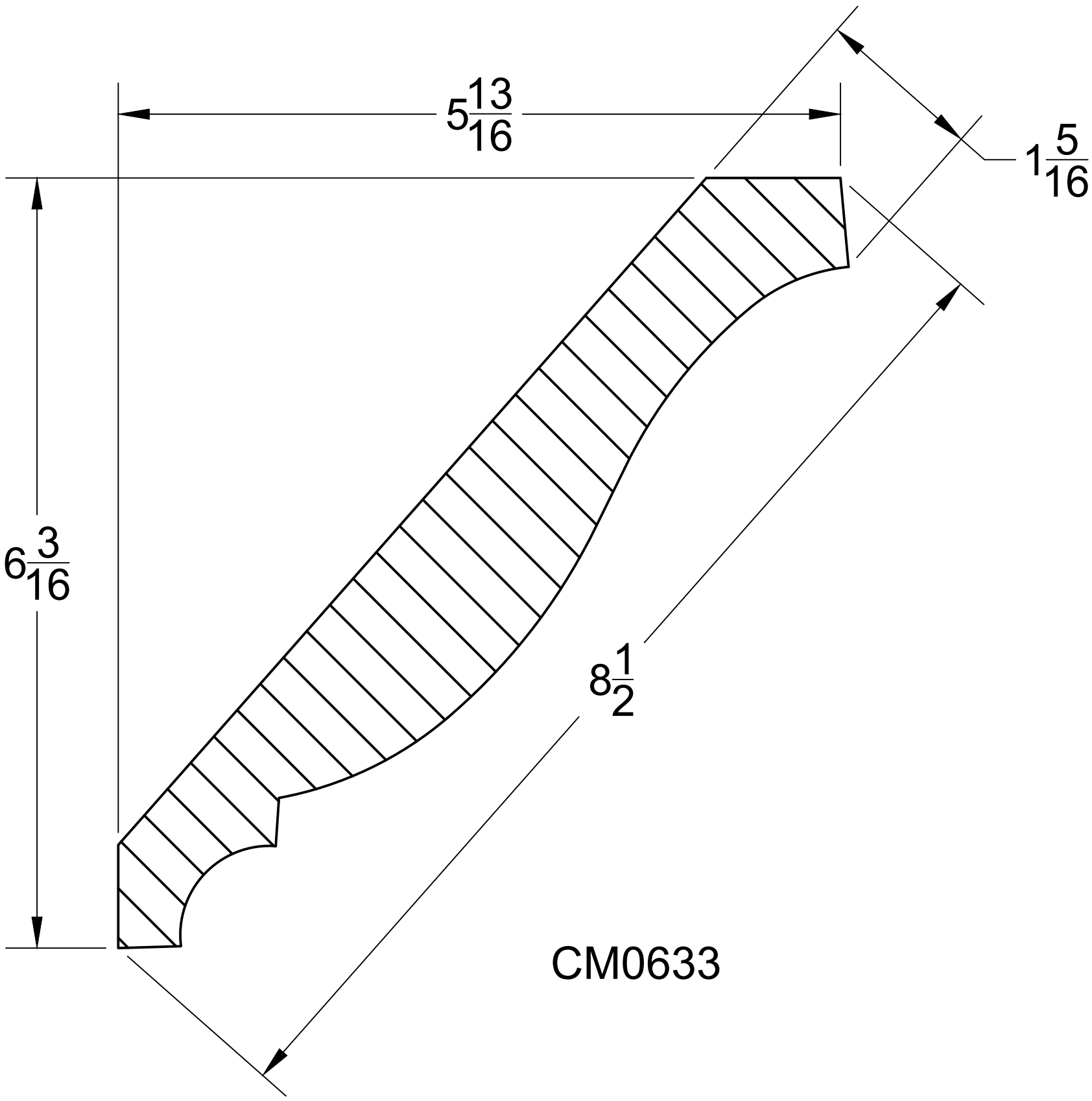
5 13/16
1 5/16
6 3/16
8 1/2
CM0633