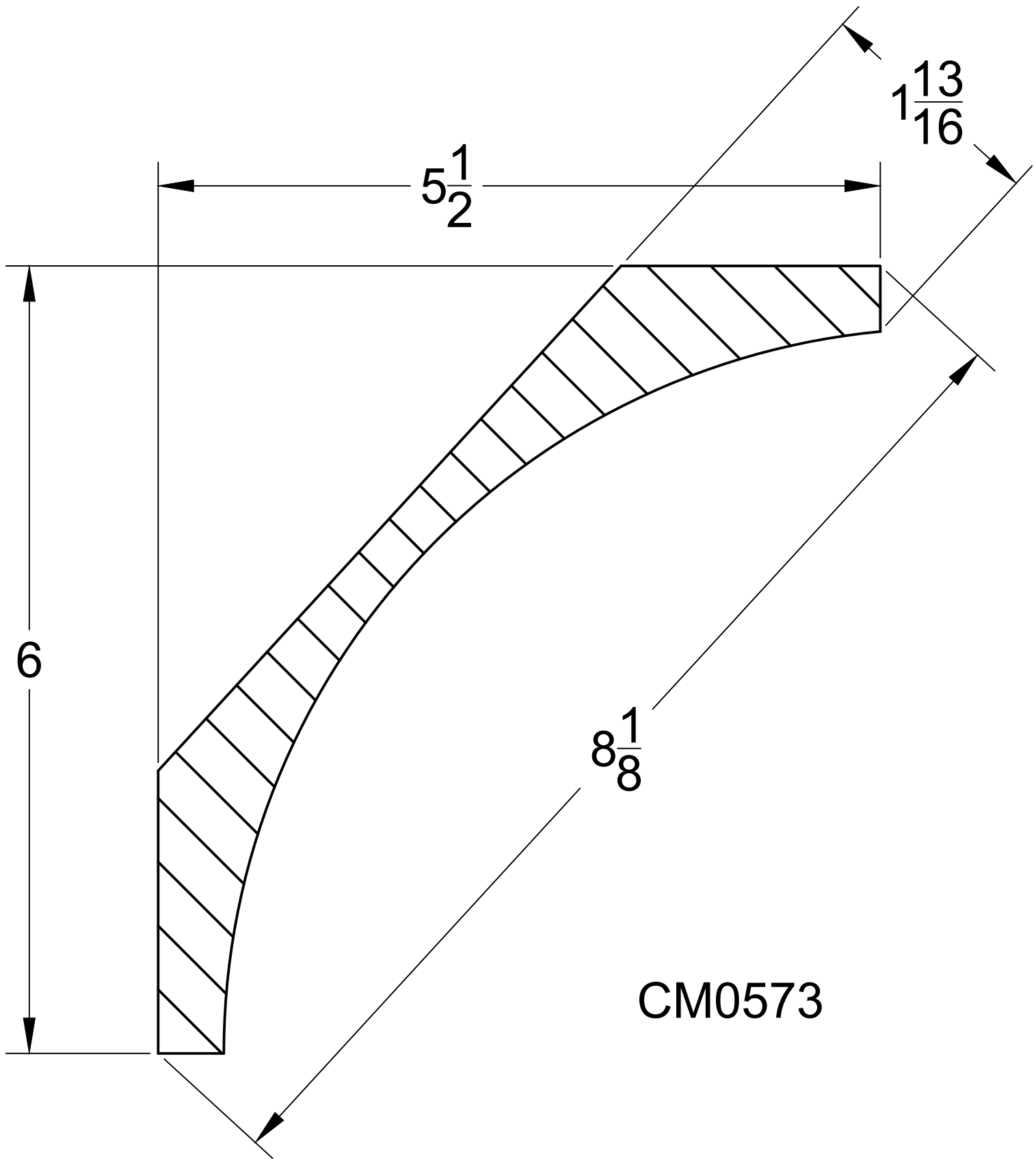
$1\frac{13}{16}$
$5\frac{1}{2}$
6
$8\frac{1}{8}$
CM0573