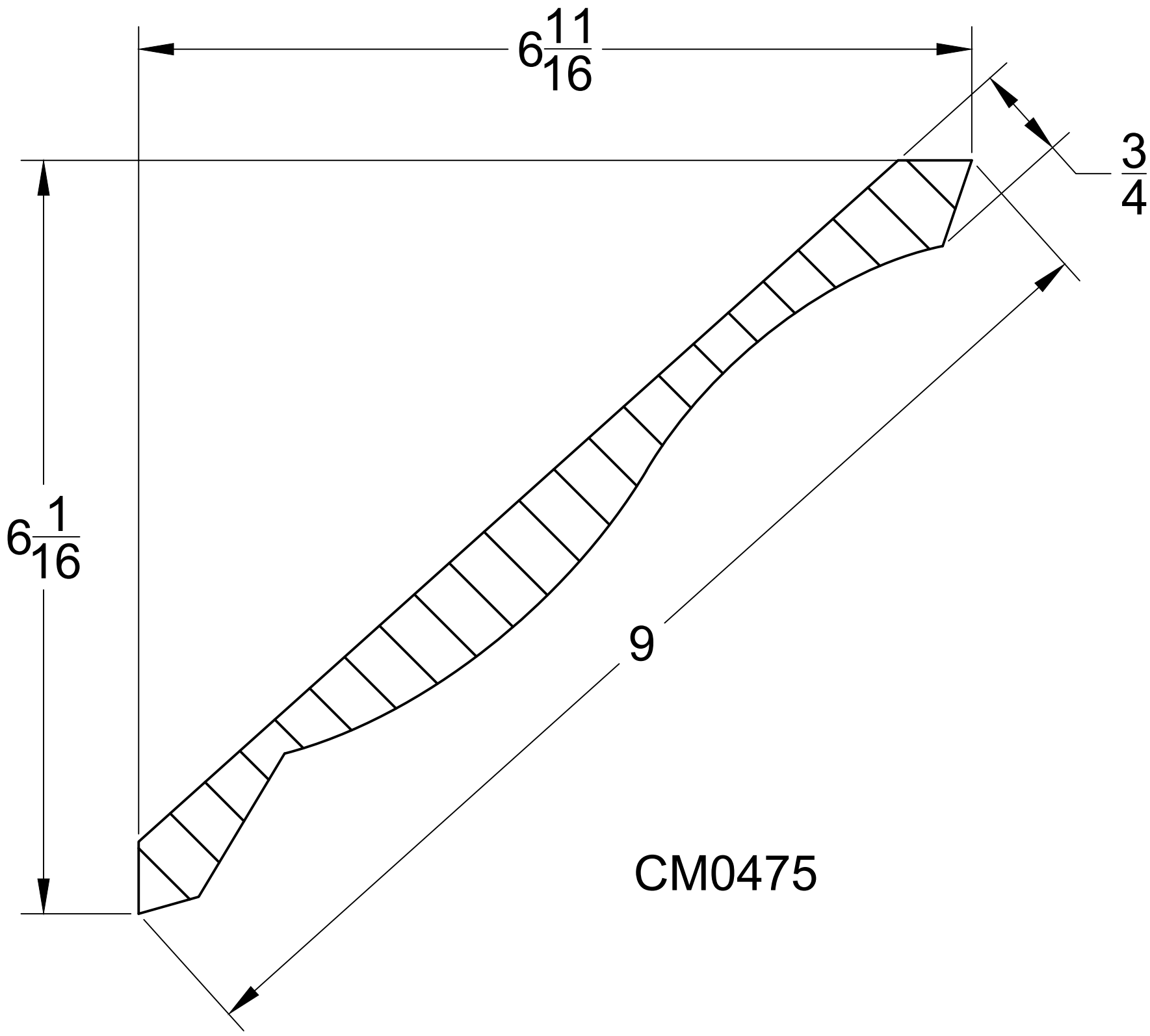
6 11/16
3/4
6 1/16
9
CM0475