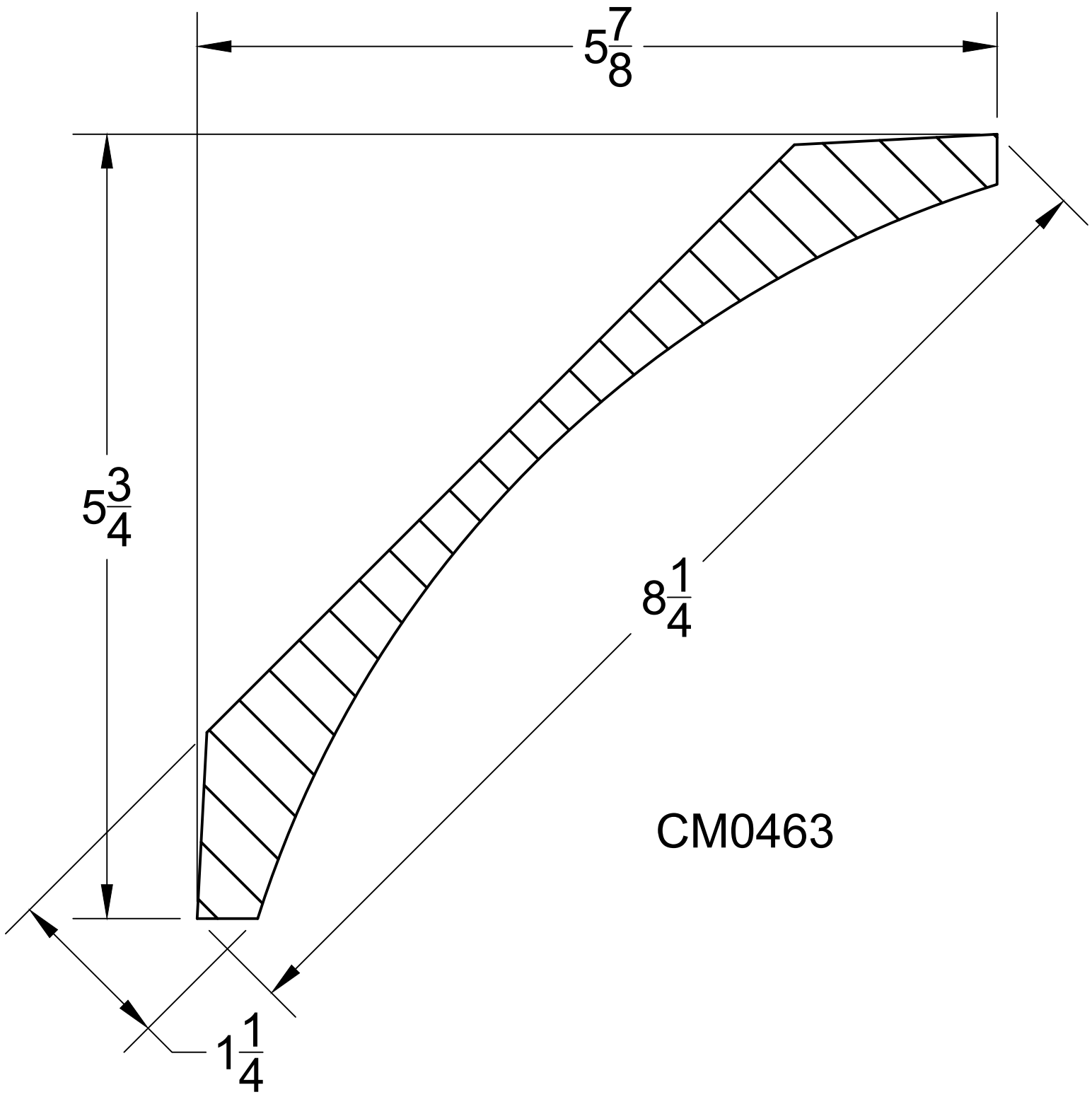
$5\frac{7}{8}$
$5\frac{3}{4}$
$8\frac{1}{4}$
CM0463
$1\frac{1}{4}$