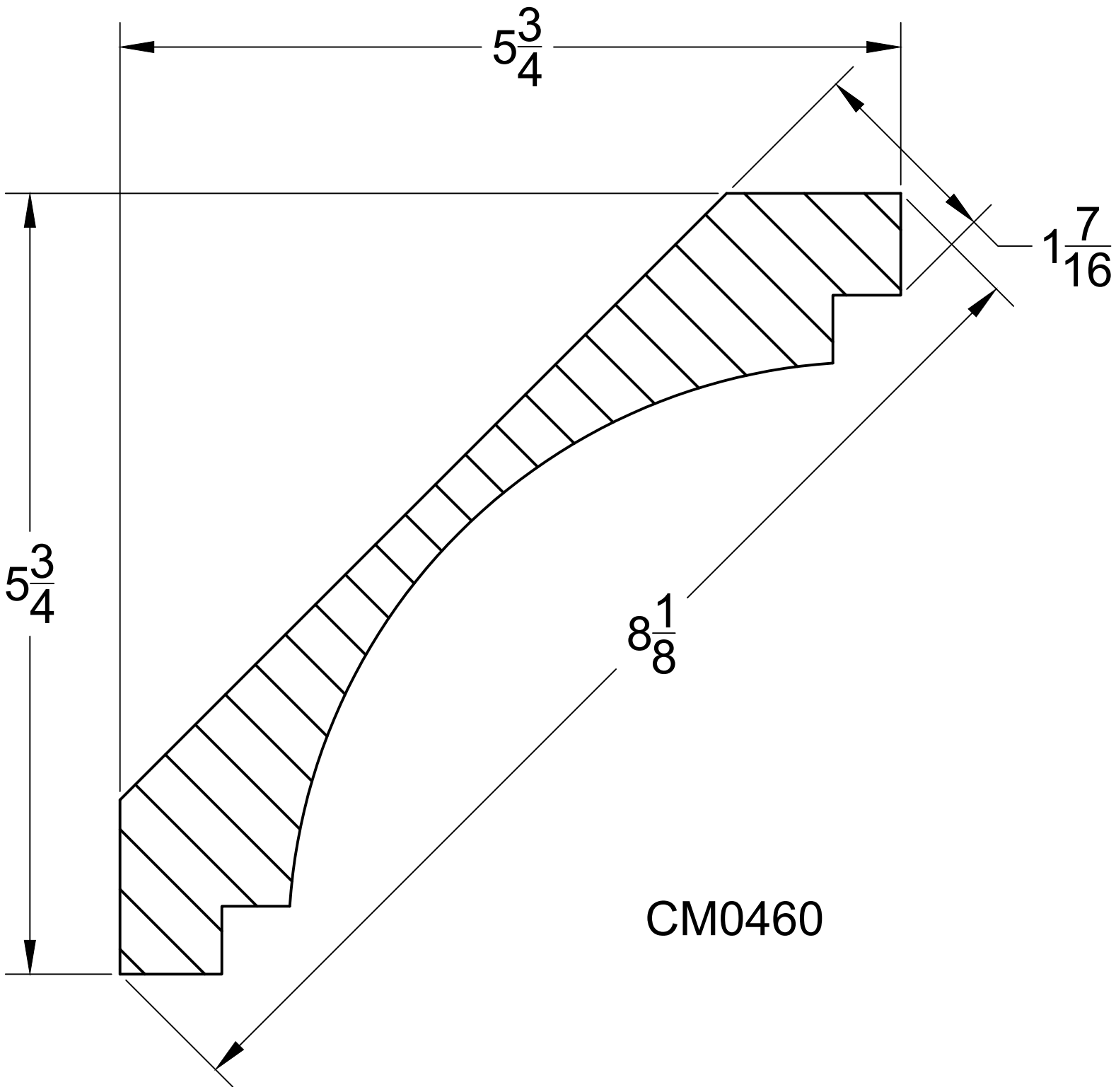
5 3/4
1 7/16
5 3/4
8 1/8
CM0460