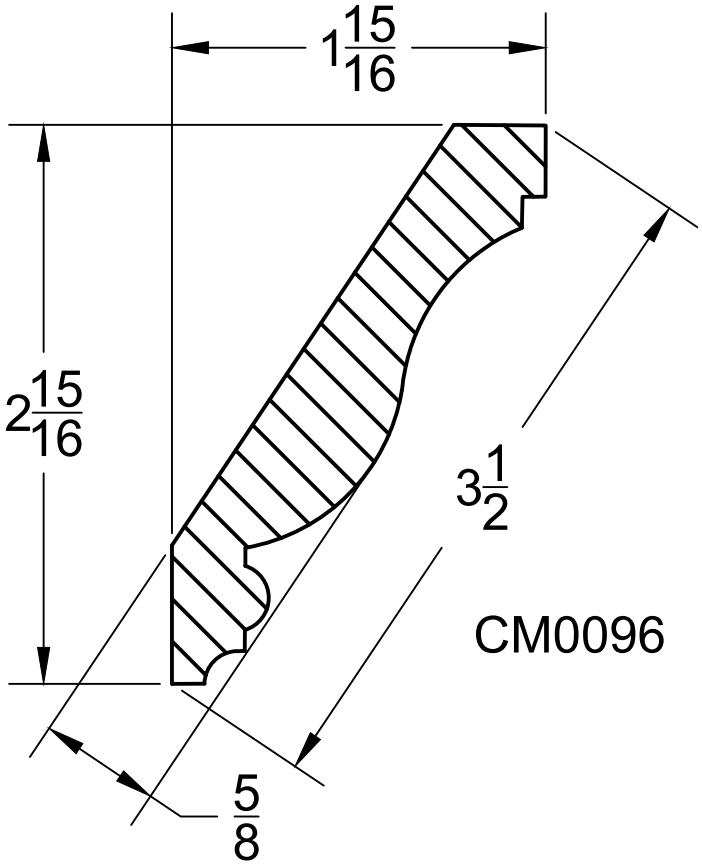
1 15/16
2 15/16
3 1/2
5/8
CM0096