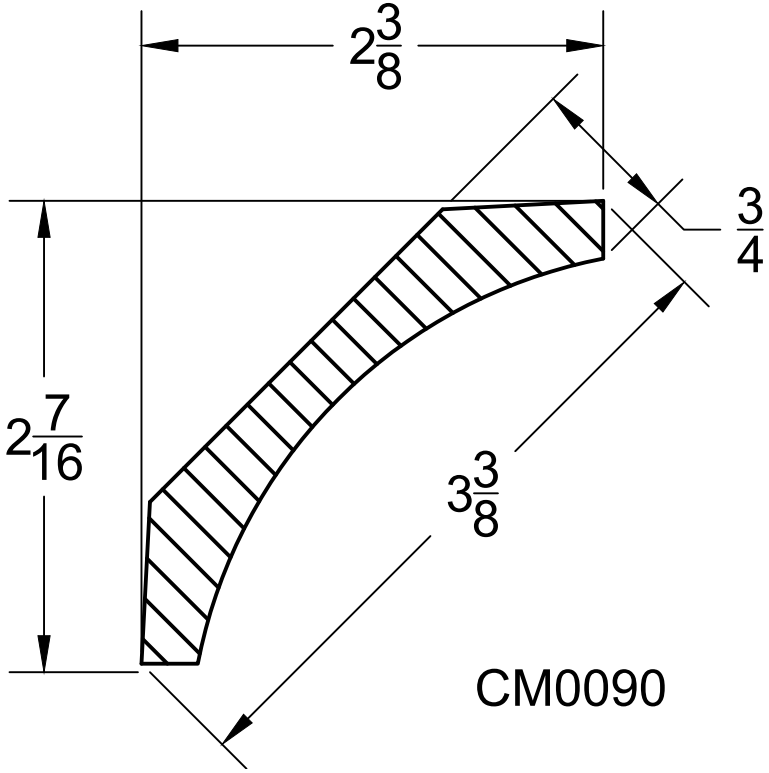
2 3/8
3/4
2 7/16
3 3/8
CM0090