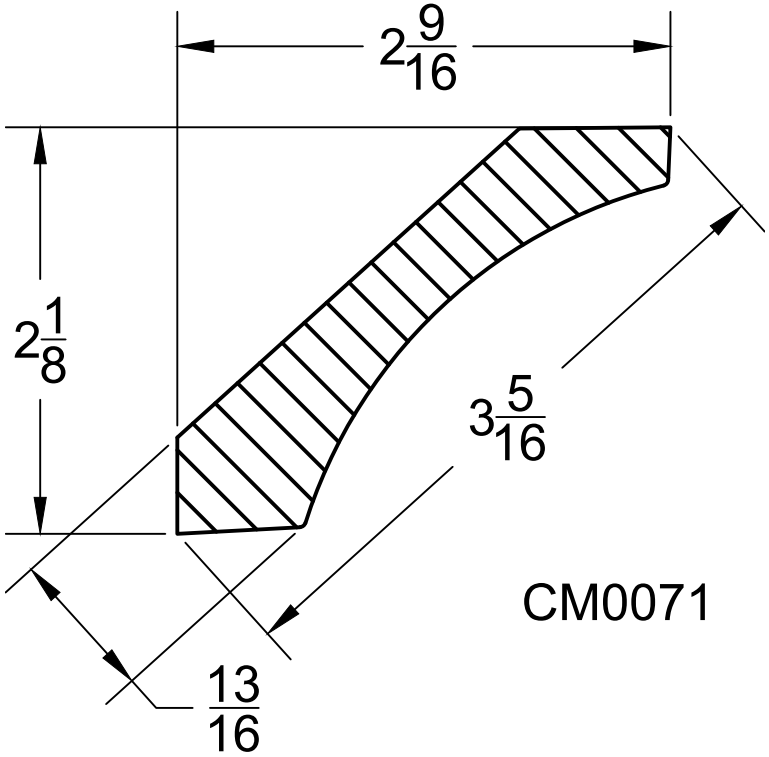
2 9/16
2 1/8
3 5/16
13/16
CM0071