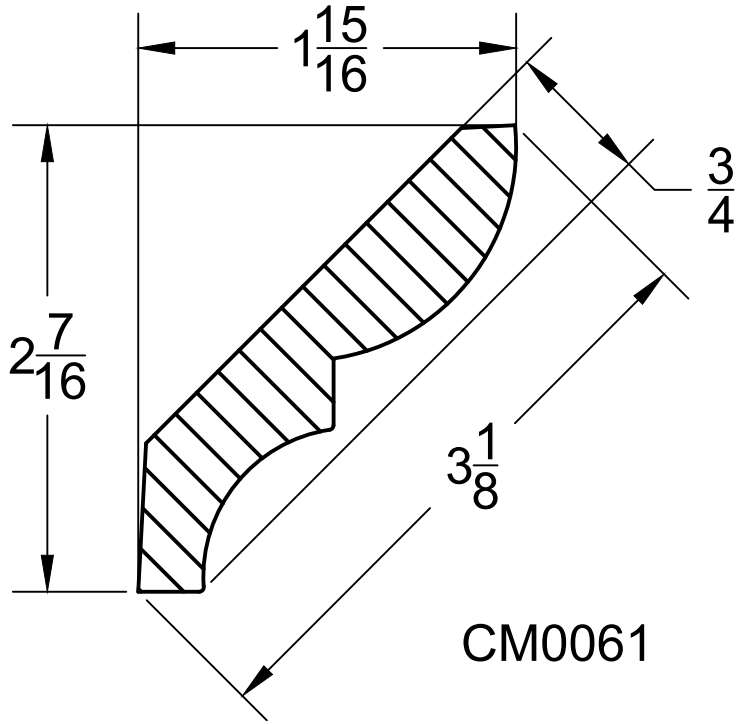
1 15/16
3/4
2 7/16
3 1/8
CM0061