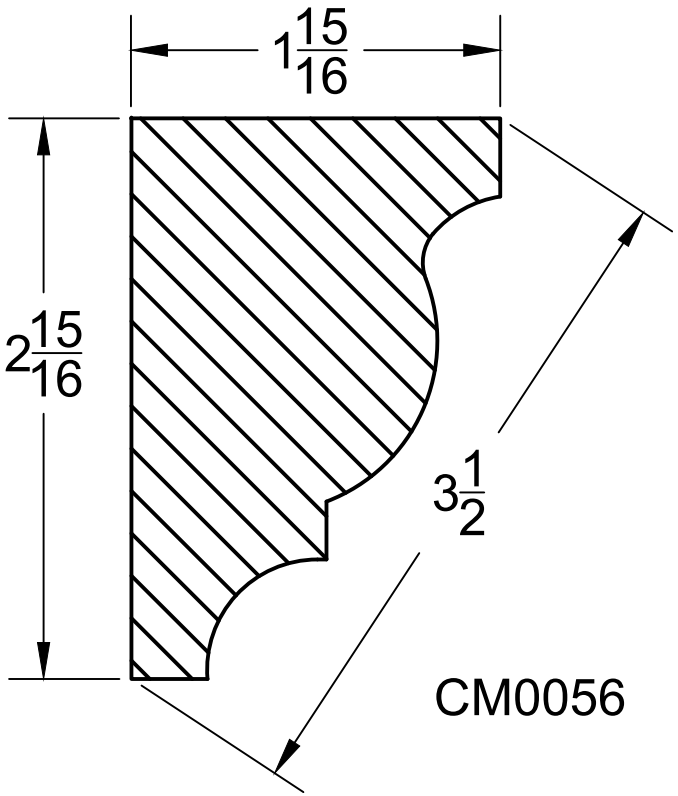
$1\frac{15}{16}$
$2\frac{15}{16}$
$3\frac{1}{2}$
CM0056