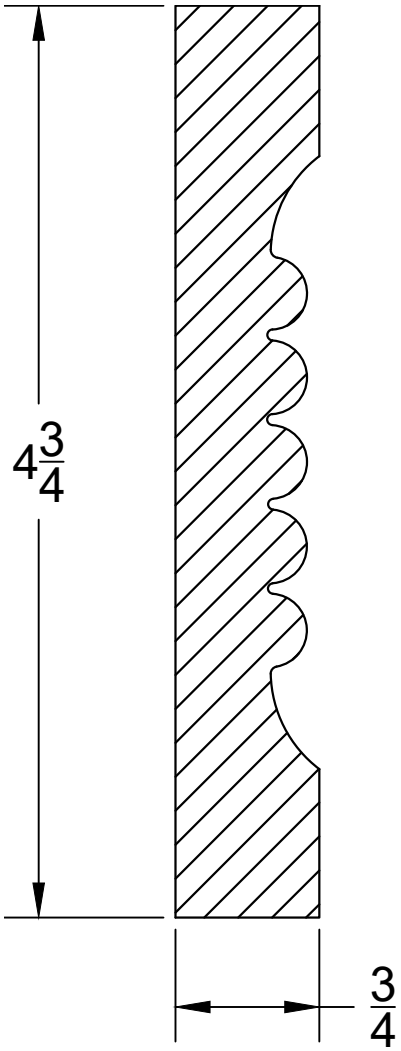

CFA