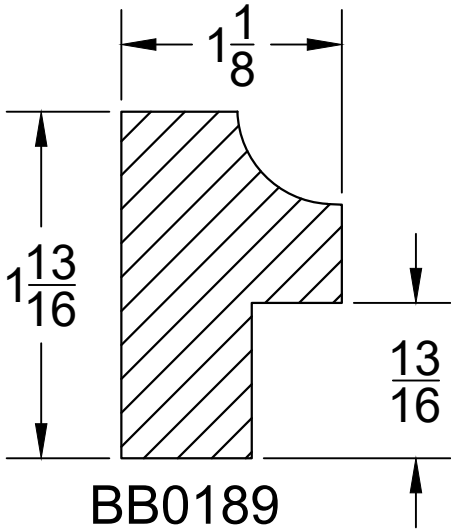
1 1/8
1 13/16
13/16
BB0189