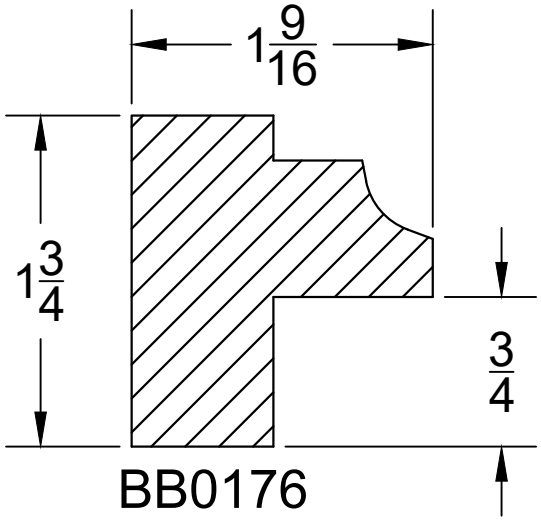

BB0176