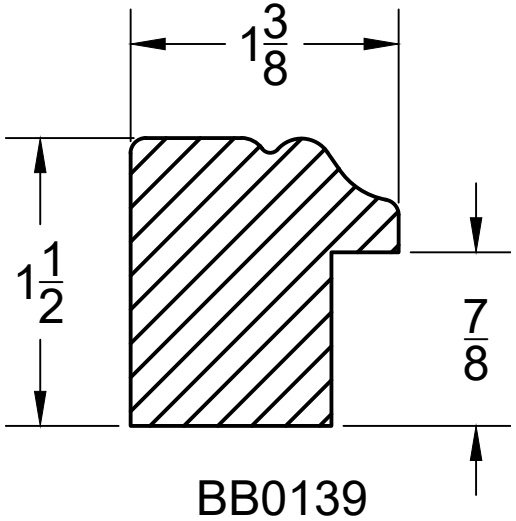
1 3/8
1 1/2
7/8
BB0139