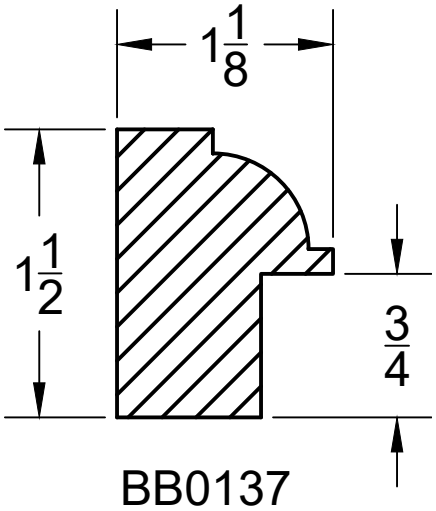
1 1/8
1 1/2
3/4
BB0137