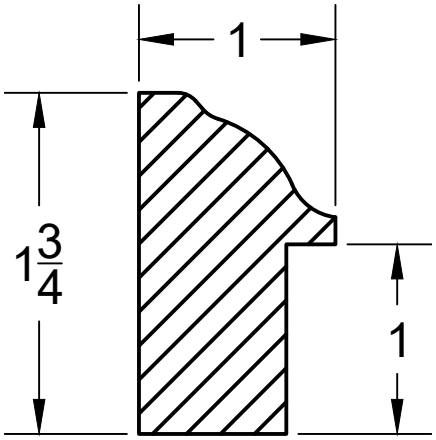

BB0136