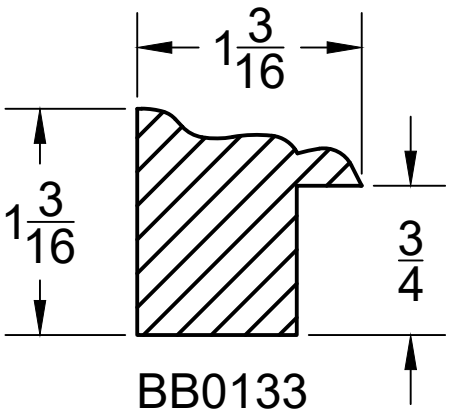
1 3/16
1 3/16
3/4
BB0133