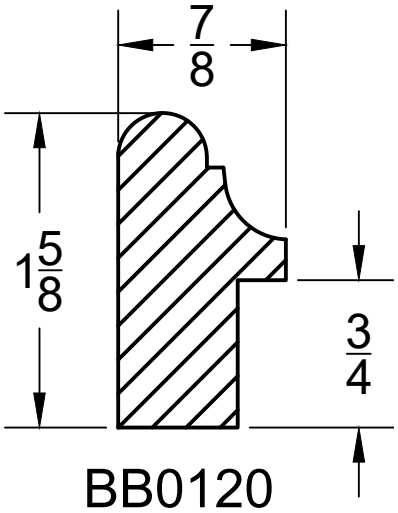
7/8
1 5/8
3/4
BB0120