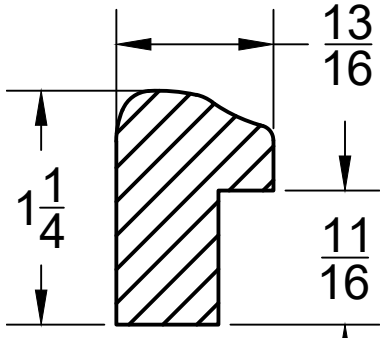

BB0118