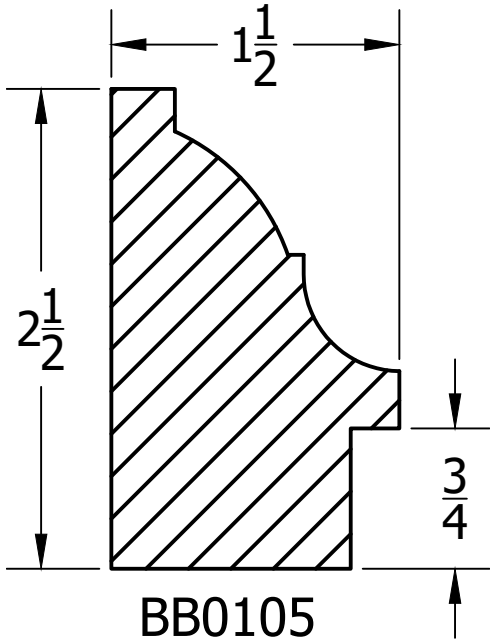

BB0105