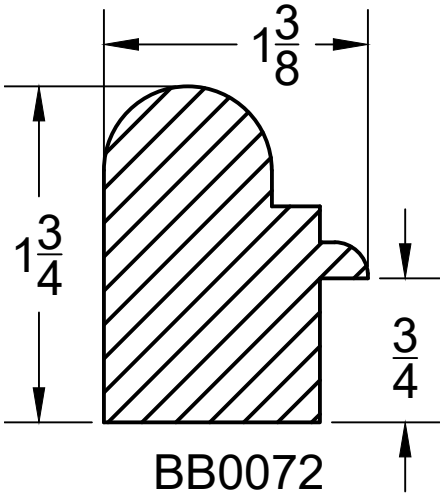
1 3/8
1 3/4
3/4
BB0072