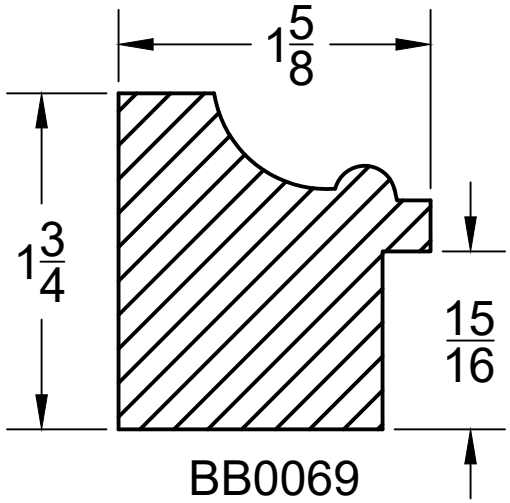
1 5/8
1 3/4
15/16
BB0069