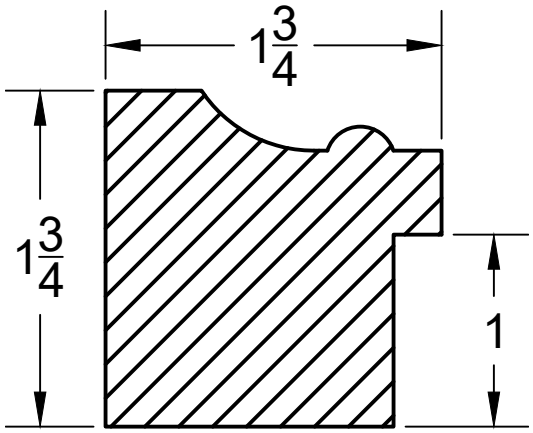

BB0064