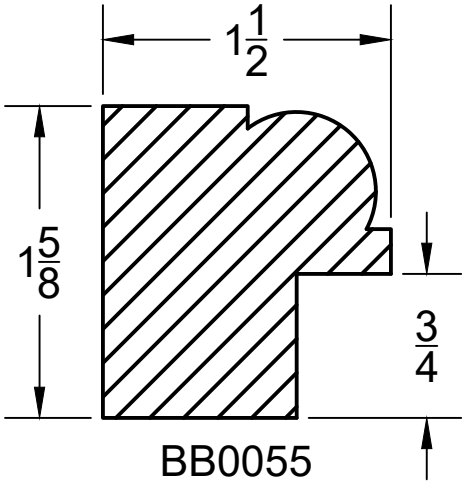
1 1/2
1 5/8
3/4
BB0055