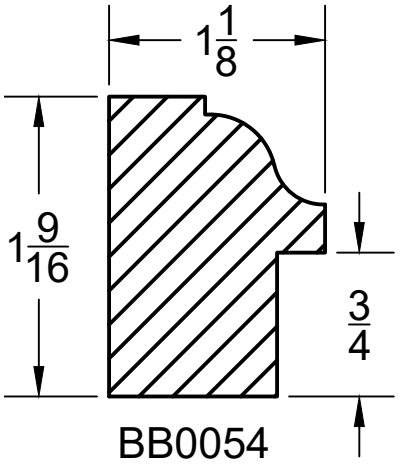
1 1/8
1 9/16
3/4
BB0054