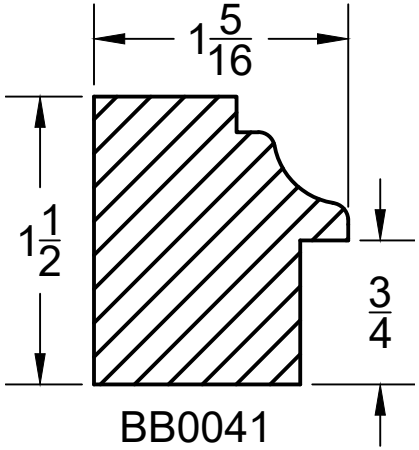
1 5/16
1 1/2
3/4
BB0041