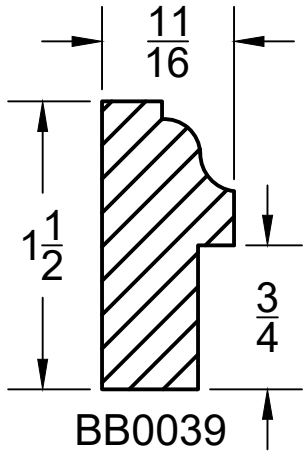
11/16
1 1/2
3/4
BB0039