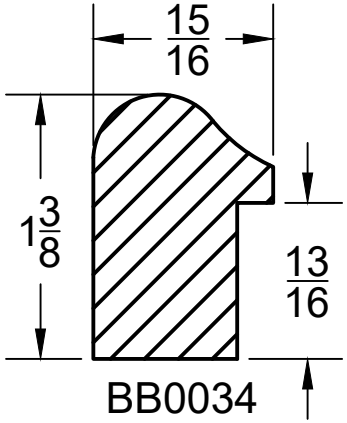
15/16
1 3/8
13/16
BB0034