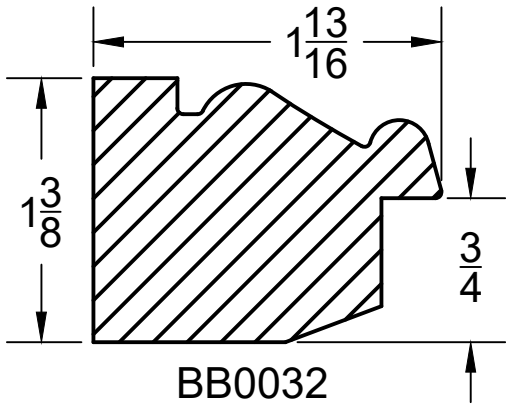
1 13/16
1 3/8
3/4
BB0032