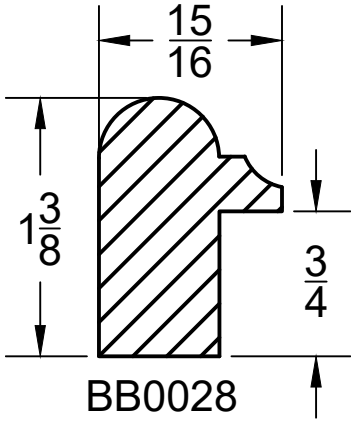
15/16
1 3/8
3/4
BB0028